The MFX_4 Terminal is the Human-Machine-Interface [HMI] for the Flow Computer and the operator in the field.

The MFX_4 Terminal can also be used as a stand-alone Access Controller for entrance/exit gates.

It is ruggedly designed for rough field operation and offers a large graphic display which can display clearly.

MFX_4 Terminal
[Ex] or [non Ex] version with Foil Keypad

[Ex] or [non Ex] version with Mechanical Keypad

The Terminal is equipped with a graphic display that can display any desired process data in large or small characters. It supports Latin or Cyrillic character sets, as well as, Chinese, Hindi, etc. Messages are displayed in pop-up windows, and it features softkeys as part of the alphanumeric keypad. The display format is configurable for any applications.

MFX_4 Terminal
On truck version

Approvals
- [Ex]: ATEX; and many int'l approvals
- [W&M]: OIML; PTB; IEC; CAN (UL); NMI (Australia); and many int'l approvals

Physical dimensions (housing)
- Ex: W 170 mm x H 55 mm x D 175 mm

Degree of protection
- Ex: IP65
- on truck version: IP22

Weight
- Ex: 8400 g (without connectors)
- on truck version 1600 g (without connectors)

Display
- Large, Full Graphic Display 1⁄4 VGA
- LED backlit

Keypads
- Foil Keypad
- Mechanical Keypad (weatherproof)

  Alphanumeric / 32 keys + 4 Soft Keys

Integrated Batch/Card Readers
- Transponder [Proximity]
- Wiegand

Communication
- 1 x Ethernet [TCP/IP] 5 ports
- 1 x CANopen Field Bus [baud rate up 1.000 kbaud]
- 1 x Modbus RTU
- 1 x RS232 or • 1x RS485

Protocols
- SP3964R
- MODBUS RTU
- CANopen

I/Os
- 2x relay outputs [option] for i.e. access/barrier control Integrated Batch/Card Readers

Multi–Language
- English, German, Russian, Chinese traditional and simplified, others on request

Power Supply
- [Ex]: 110–240 VAC, +10, –15%, 50/60 Hz (15 W)
- 24 VDC +–10%

Explosion Proof
- EEX d IIB T6 IP65

Operating Temperature
- –25°C to +60°C
- –40°C to +60°C (special)

Physical Dimensions
MFX_4 Terminal [Ex]-version

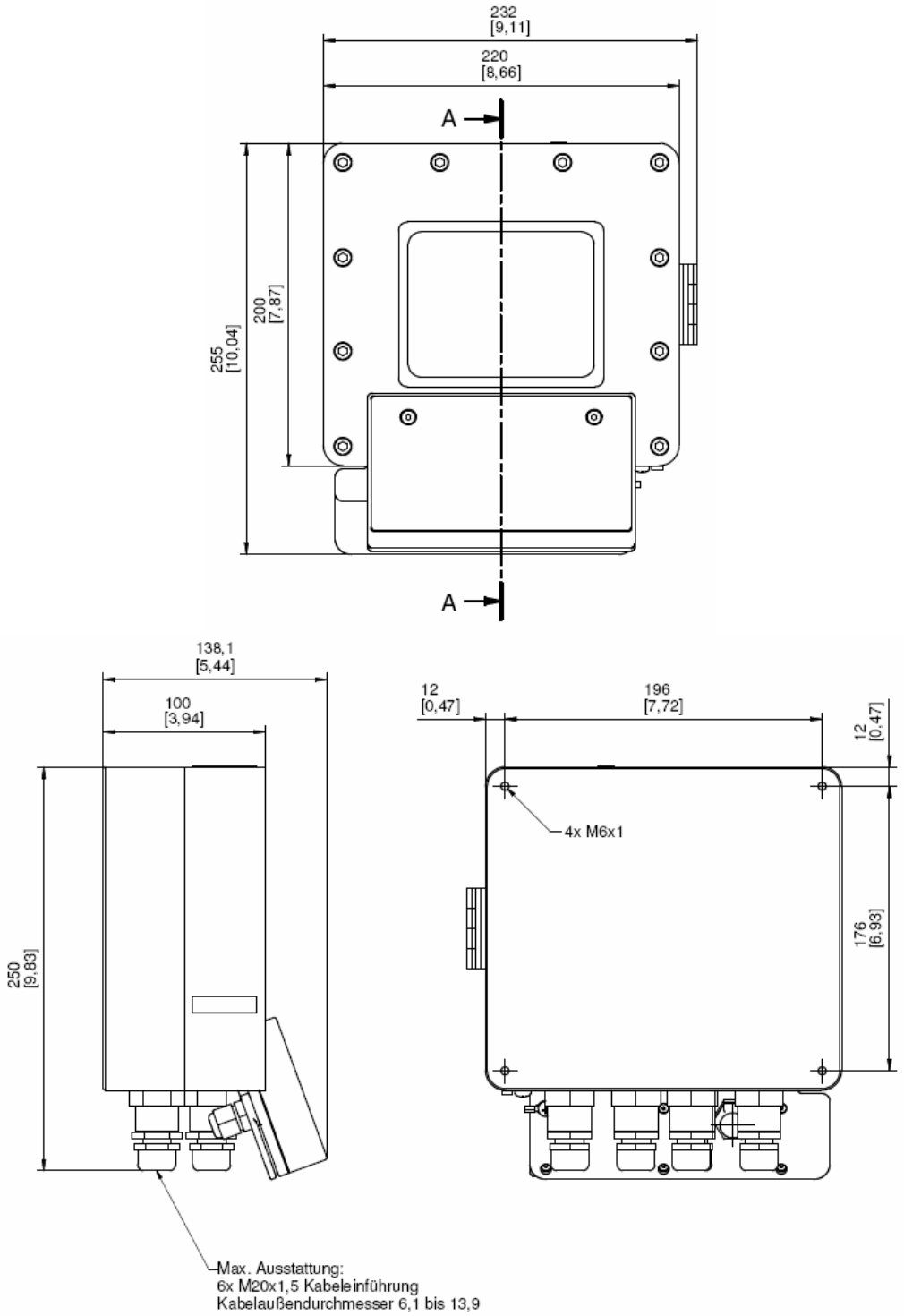

Bemassung / *Dimensions*

254 : Maße in Millimeter
[10] : *Dimension in inches (for onformation only)*

Physical Dimensions
Optional:
Protective housing on rotating assembly on stand (for MFX_4 Terminal [Ex]-version)

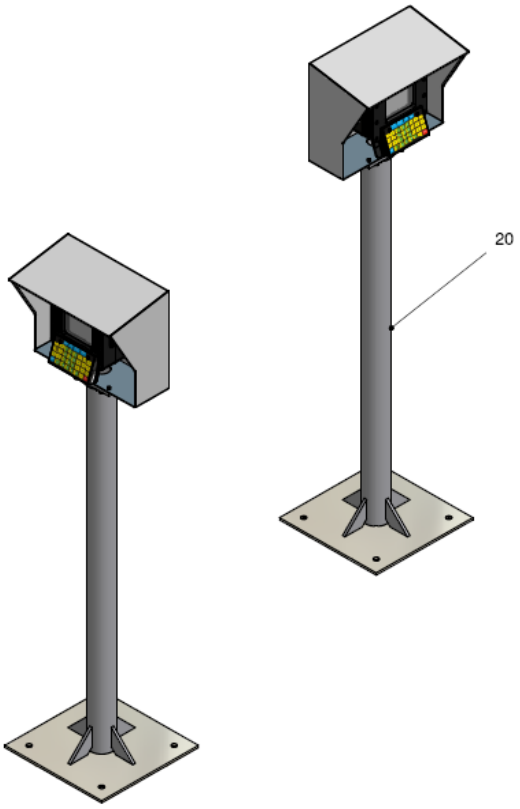

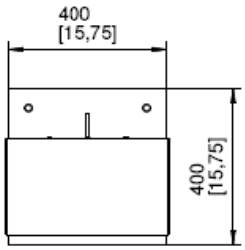

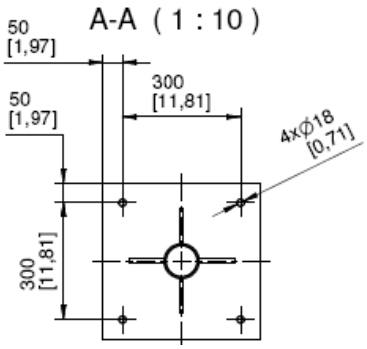

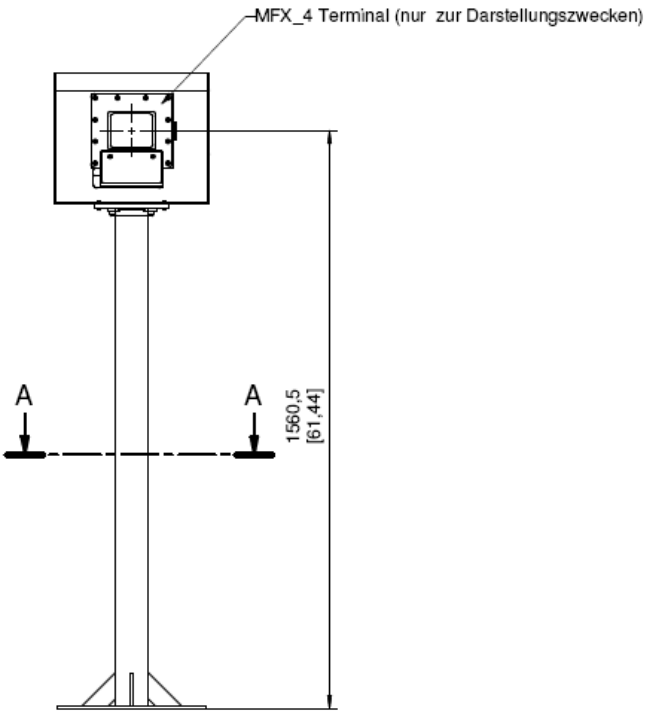

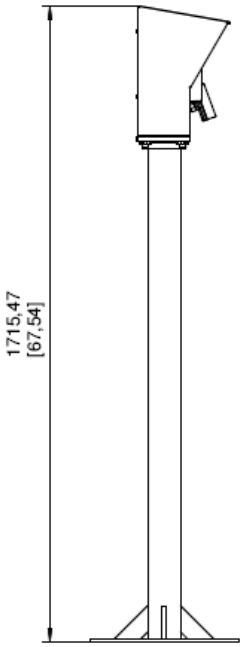

Bemassung / *Dimensions*

254 : Maße in Millimeter
[10] : *Dimension in inches (for onfomation only)*

Typical Configuration

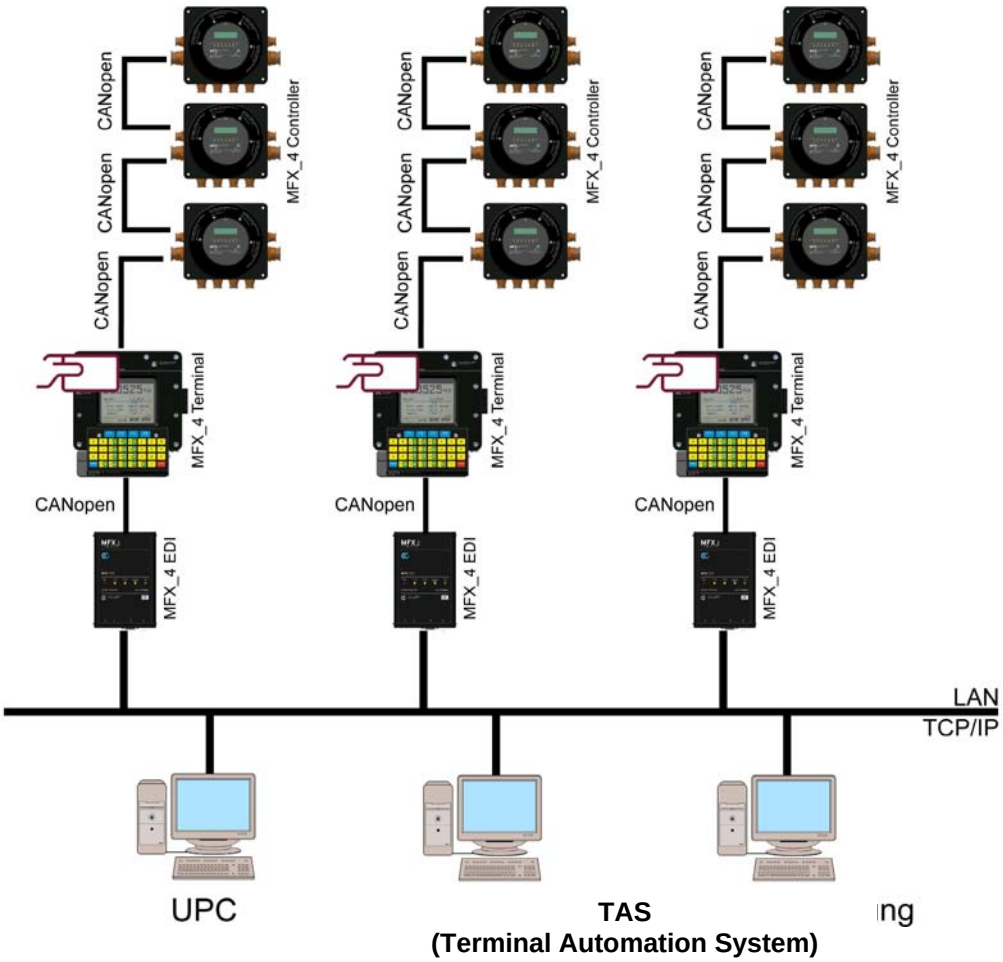

MFX_4 Terminal Product Codes

MFX_4 Terminal Explosion proof / IP65 - 230V AC or 24V DC

Code: MFX_4 Terminal Ex - 1 - 2 - 3 - 4 - 5 - 6

1 **Basic Unit (without keyboard)**

230V AC	P230
24V DC	P024

2 **Keypad**

No keypad	K0
Foil	KF
Mechanical pushbuttons	KM

3 **Card reader**

Without	CR0
RFID	CR1
Wiegand	CR2
RFID + Wiegand	CR3

4 **Ethernet**

Without	E0
With	E1

5 **Relays**

0 Relays	R0
2 Relays	R1

6 **Cable Set**

Without	C00
5m (Power + CANopen)	C05
15m (Power + CANopen)	C15

Example

Code	MFX_4 Terminal Ex-P230-KF-CR0-E0-R0-C00
	MFX_4 Terminal Ex-P230-KF-CR1-E0-R0-C00
	MFX_4 Terminal Ex-P24-KF-CR0-E0-R0-C00
	MFX_4 Terminal Ex-P24-KF-CR1-E0-R0-C00

MFX_4 Terminal IP 20 - 24V DC (Indoor)

4107511+521010	Basic Unit
4107511+521020	for installation in electrical cabinet

Mess- und Fördertechnik
Gwinner G.m.b.H. & Co.

Street address:
Weidenbaumsweg 91 A
21035 Hamburg

Post address:
P.O. Box 800609
21006 Hamburg

Germany

Telephone + 049 [0] 40 725 50 - 0
Fax + 049 [0] 40 725 50 - 111

info@mfx-systems.de
www.mfx-systems.de